the tote bag

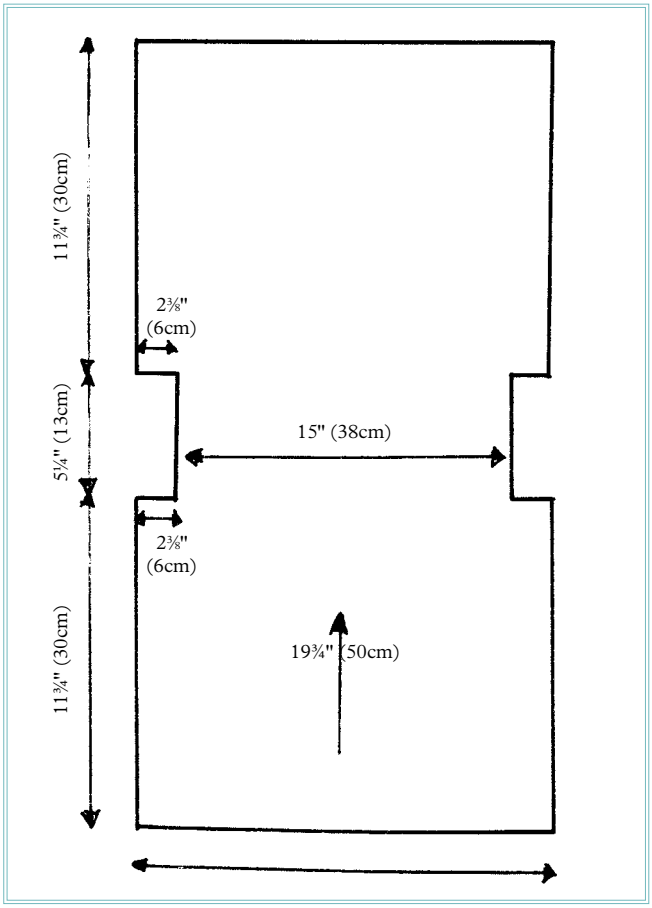

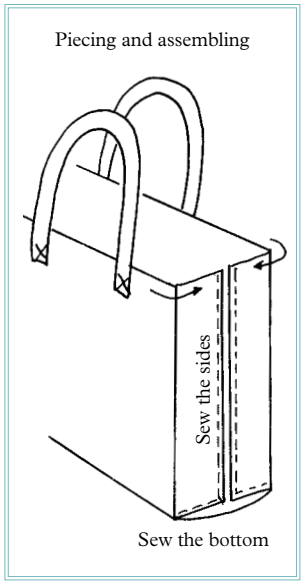

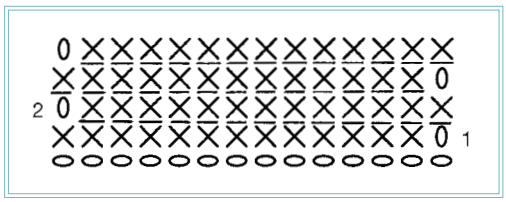

✻ **back loop single crochet/horizontal ribbing**